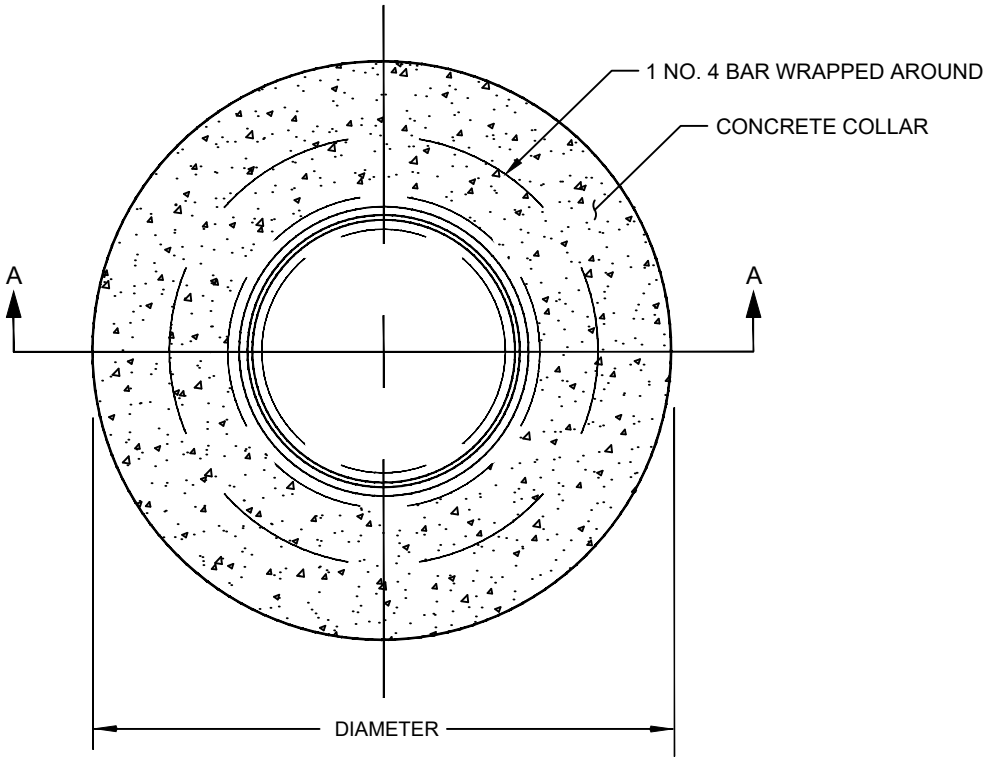

PLAN

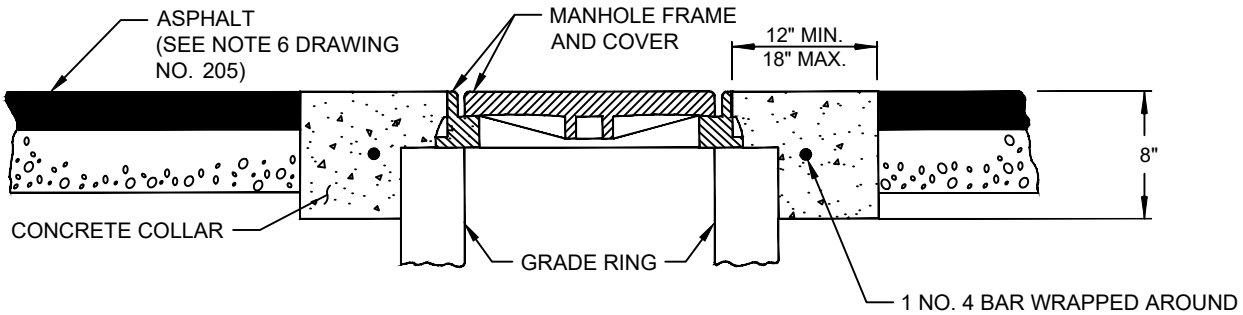

SECTION A-A

NOTES

1. CONCRETE COLLAR, FRAME, AND COVER SHALL BE CONSTRUCTED 1/8" BELOW THE ADJACENT SURFACE, ±1/16".
2. CONCRETE COLLAR NOT REQUIRED IN UNINCORPORATED CLARK COUNTY RESIDENTIAL STREETS LESS THAN 80' R/W WIDTH.
3. IF MANHOLE IS MORE THAN 1-1/2" ABOVE OR BELOW THE ADJACENT ROADWAY SURFACE, MANHOLE SHALL BE ADJUSTED TO GRADE BY UTILITY OWNER.
4. IF MANHOLE IS MORE THAN 1/4" ABOVE OR BELOW THE ADJACENT ROADWAY SURFACE IN A BICYCLE LANE, MANHOLE SHALL BE ADJUSTED TO GRADE BY UTILITY OWNER.
5. WHEN INSTALLED WITHIN PEDESTRIAN ACCESS ROUTES, TOP OF MANHOLE COVERS SHALL HAVE NO VERTICAL SURFACE DISCONTINUITIES GREATER THAN 1/4" WITH ADJACENT SURFACE, HAVE NO GAPS GREATER THAN 1/2" REGARDLESS OF CONSTRUCTION TOLERANCES, AND BE FIRM, STABLE, AND SLIP RESISTANT.

AGENCY APPROVED				L			

SPECIFICATION REFERENCE	
501	CONCRETE
505	REINFORCING STEEL
.	

UNIFORM STANDARD DRAWINGS
CLARK COUNTY AREA

SUPPLEMENTAL DRAWING

CONCRETE COLLAR AROUND MANHOLES

DATE 06-10-21 | DWG. NO. 408.S1